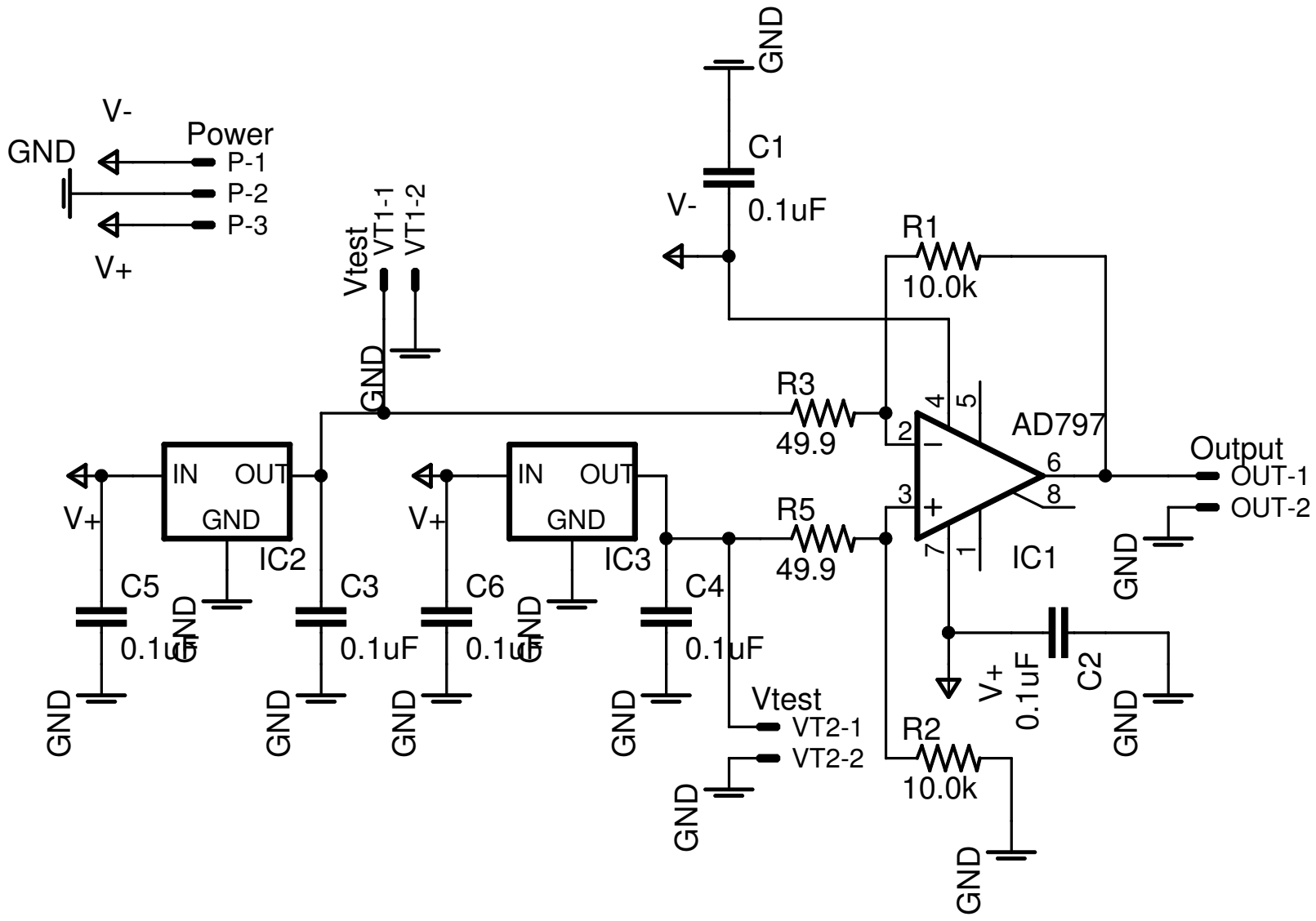

11/02/2006 01:33:38p f=2.00 C:\Program Files\EAGLE-4.16r1\projects\Vref + amplifier\amplifier.sch (Sheet: 1/1)